# The grating monochromator

JINTIAN WANG, Exeter College, Oxford

March 10, 2026

**Abstract**

1

## 1 Introduction

As quantum theory developed, energy levels of atoms were found to be quantized, and the emission spectra of atoms were found to consist of discrete lines. By measuring the wavelengths of these lines, the energy levels of atoms could be determined, and we can verify the predictions of quantum theory. In this experiment, we will use a Czerny-Turner monochromator to measure the emission spectrum of a mercury lamp, and determine the energy levels of mercury atoms. Then we will use the same monochromator to measure the emission spectrum of a hydrogen lamp, and determine the wavelengths each emission line corresponds to.

## 2 Theory

In the Czerny-Turner monochromator, concave mirrors are used to collimate the beam of light falling on the grating and to focus those beams diffracted from the grating, as shown in figure 1.

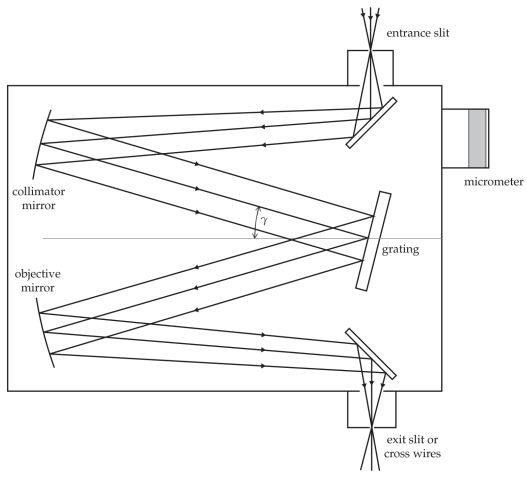


Figure 1: Czerny–Turner monochromator.

| | |
|---|---|
| Grating size | 48 mm × 48 mm |
| Ruling frequency ($1/d$) | 1200 lines/mm |
| Mirror diameter | 63.5 mm |
| Mirror radius of curvature | 439 mm |
| Czerny–Turner angle, $\gamma$ | 25°28′ |
| Length of sine-bar, $l$ | 75.24 mm |

Table 1: Design parameters of the Czerny-Turner monochromator.

According to [1], the wavelength $\lambda$ of the light diffracted by the grating is given by

$$\lambda = z\left(\frac{2d\cos\gamma}{pl}\right), \tag{1}$$

where $z$ is the reading on the sine-bar, $d$ is the grating spacing, $\gamma$ is the Czerny–Turner angle, $p$ is the ruling frequency of the grating, and $l$ is the length of the sine-bar. Take the data in table 1, we can calculate coefficient $2d\cos\gamma/pl = 2.000 \times 10^{-5}$, which means the wavelength of the diffracted light is approximately equal to the reading on the sine-bar in millimeters.

# 3 Experimental Setup

3

# 4 Data

4

# 5 Analysis

5

# 6 Conclusion

6

# References

[1] OP13: The grating monochromator